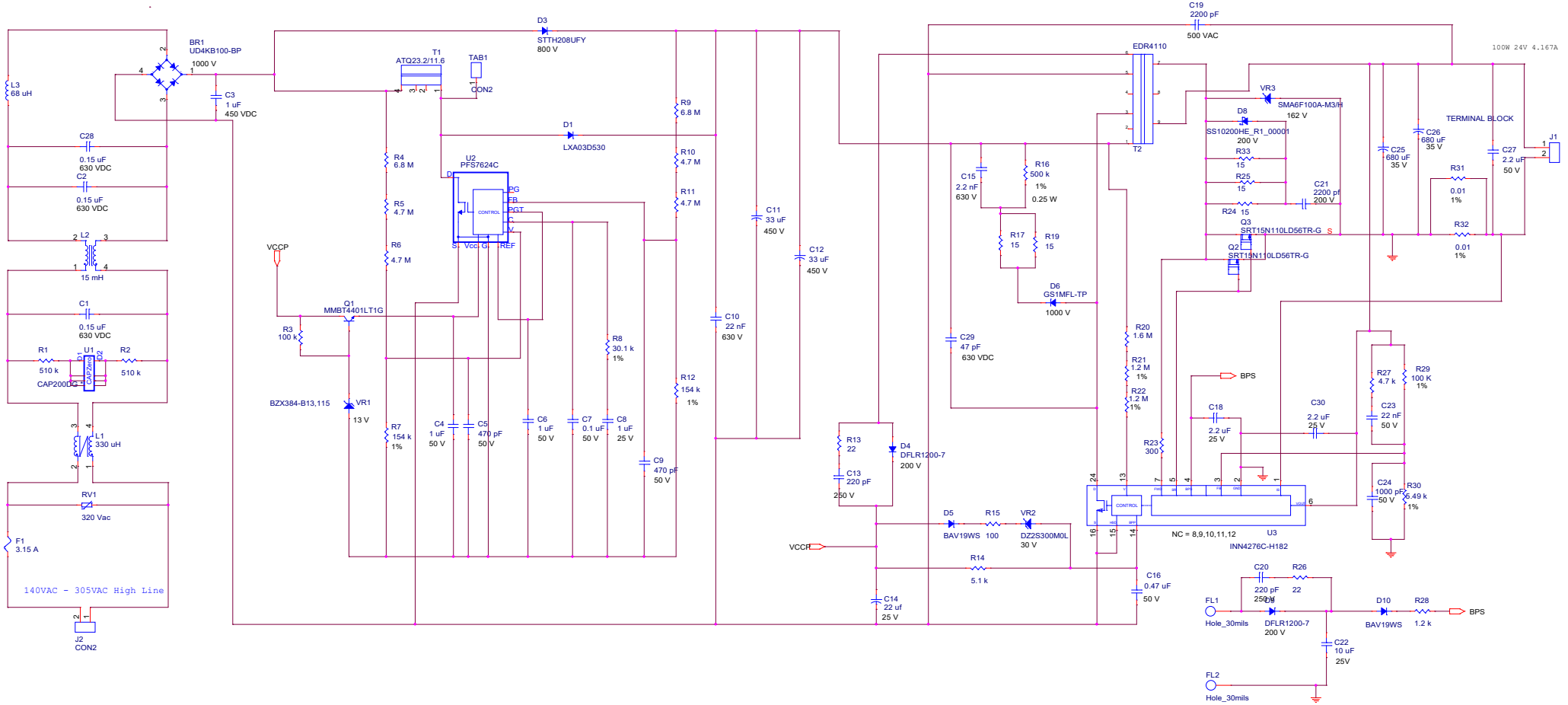

The product and applications illustrated herein (including circuits external to the product and transformer construction) may be covered by one or more U.S. and foreign patents or potentially by pending U.S. and foreign patent applications assigned to Power Integrations. A complete list of Power Integrations' patents may be found at www.powerint.com.

Copyright 2010, Power Integrations Proprietary and Confidential

POWER INTEGRATIONS
5245 Hellyer Avenue
San Jose, CA USA 95138
http://www.powerint.com

Page Title	Fisheck Section		
Board Title	<Title>		
Size	Doc Number	Revision	
[ ]	<Doc>	<Rev>	
Date:	Wednesday, June 26, 2024	Sheet	1 of 1